R. DIAS CONSTRUCTION, LLC

1. GENERAL

1.1 This Contract dated March 28, 2025, is between Estes Point Development LLC, 518 Peoples Street Corpus Christi, TX 78401, (hereinafter "Owner") and R Dias Construction, LLC., (d.b.a. Richard Dias Construction Company) a Texas Limited Liability Company having its principal place of business at 4570 Highway 35 North, Rockport, Texas 78382 (hereinafter "Contractor"). The Contract shall be governed by the laws of the State of Texas.

1.2 The purpose of this contract is to provide the terms and conditions for a Monument Sign located on Owner's property identified as Marea in Aransas County (hereinafter "the Project"). The scope of this Project is defined in the architectural drawings and specifications shared by the Owner and the Contractor.

2. THE SCOPE OF THE PROJECT

The general scope of the Project is for the Contractor to furnish all labor, materials, services, and equipment required in conjunction with or properly incidental to completion of the Project in accordance with the Plans, all of which (shall hereinafter be referred to as "the Work").

3. RELATIONSHIP OF THE PARTIES

The Contractor covenants with Owner to utilize Contractor's skill, efforts and judgment in furthering the interest of Owner; to furnish efficient business administration and supervision; to make reasonable efforts to furnish at all times an adequate supply of workers and materials; and to perform all tasks and duties required under this Contract in an expeditious and economical manner consistent with the interest of the Owner. The Owner agrees to exercise best efforts to furnish and provide in a timely way information and selections required by Contractor.

4. CONTRACT AMOUNT AND CONTRACTOR'S FEE

The Owner shall compensate Contractor for Contractor's performance of the contract consisting of the Cost of the Work plus the Contractor's Fee determined on the basis of ten percent (10%) overhead, then taking that total and adding ten percent (10%) profit. Pending final plans, specs, permits and approvals, subject to adjustments of supplemental claims and replacement cost.

5. COST TO BE REIMBURSED

5.1 The term "Cost of the Work" shall mean costs incurred by the Contractor in the proper performance of the Work and include the following:

(a) payment of wages for construction labor directly employed by Contractor pursuant to the labor categories identified in Attachment B;
(b) payments made to subcontractors.
(c) costs of materials.
(d) reasonable rental costs for necessary temporary facilities, machinery, equipment, and hand tools used at the site of the Work.
(e) premiums for insurance and bonds.
(f) costs of removal of debris from the site.
(g) costs incurred in taking action to prevent threatened damage, injury or loss in case of an emergency affecting the safety of persons and property at the site.
(h) cost of builder's risk, windstorm and flood insurance coverage, and
(i) costs of changes made pursuant to Paragraph 9.1.

5.2 Cost for Labor Categories set forth shall be billed at $36.00 per man hour, regardless of actual man hour cost to the Contractor. Site superintendents shall be billed at $62.50 per hour and Associate Project Managers shall be billed at $52.50 per hour. Finish items will be selected by owner and invoiced to contractor at his costs.

5.3 **The Cost of the Work shall not include:**

(a) salaries and other compensation of the Contractor's personnel stationed at the Contractor's principal office location,
(b) expenses of the Contractor's principal office and offices other than the site of the Project.
(c) overhead and general expenses not directly associated with the Project; and
(d) the Contractor's capital expenses, and interest paid.

5.4 The Contractor shall keep accounts and exercise such controls as may be necessary for proper financial management under this contract.

6. PROGRESS PAYMENTS

6.1 There will be a mobilization fee of 10% ($2,494.63) of the project budget due at contract signing. This amount will be applied to the final invoice. Any payment overage will be reimbursed to the Owner. On or about the first day of each month, Contractor will invoice Owner for the Cost of the Work billed to the Project for the past month. No retainage to be withheld from Contractor's invoice by Owner or others.

6.2 Payment of the Contractor's invoices shall be made by the Owner within ten (10) days of the issuance of the invoice. Payment may be withheld only for cause put forth in written form for: failure to carry out work in accordance with the Plan; lack of proof of payment to subcontractors and/or suppliers; defective Work not remedied; or failure of the Work to meet reasonable standards of workmanship quality normally observed for projects of similar type and circumstances, the matter shall be resolved by an independent party agreed to by the parties who has expertise in regard to the subject matter of the matters in dispute.

6.3 Payments due and unpaid to the Contractor shall bear interest at the legal rate of ten (10) percent per annum commencing thirty (30) days after the date of the invoice.

6.4 In the event that the final invoice is greater than the mobilization fee, a final payment in the amount of the accrued Contractor fee specified in Paragraph 6.1 shall be immediately due upon Owner acceptance of the Project after the following events; (i) notification of the Owner by Contractor that the Project is complete; (ii) Owner inspection and walk-through to compile a "punch list" of items which Owner deems to be defective, incomplete, not in accordance with the Plans, or not in accordance with reasonable standards of workmanship; (iii) Contractor has addressed Owner's punch list of items to Owner's reasonable satisfaction as acknowledged in writing in the form of release to Contractor; and (iv) Contractor has furnished Owner signed mechanic's and materialmen's lien waivers for materials, equipment, supplies and as to supplies, and subcontractor labor used in the project.

7. CONTRACTOR RESPONSIBILITIES

7.1 After execution of the Contract, Contractor shall act immediately to obtain in Contractor's name permits required by all governmental authorities having regulatory jurisdiction over the Project; arrange for all required site engineering and preparation; arrange for all installation of temporary and permanent utility services; and arrange and document all builder's risk, windstorm and flood insurance coverage.

7.2 The Contractor shall supervise and direct the Work. The Contractor shall be solely responsible for and have control over construction means, methods, and procedures for coordinating all portions of the Work unless the Plans give other specific instructions concerning such matters. The Contractor shall so direct the progress and quality of the Work performed in such a manner as to assure that the Work performed will be completed. When completed, the Work will be in accordance with the Plans and will meet reasonable standards of workmanship quality normally observed for projects of similar type and circumstances.

7.3 In furtherance of the discharge of Contractor's responsibilities under Paragraph 7.2, and in order to provide Owner with a single source of responsibility for supervision and coordination of the Work, Contractor shall assume responsibility for coordination of trades, ordering of materials, scheduling of work, and compliance with applicable codes.

7.4 The Contractor shall provide and pay for labor, materials, equipment, tools, construction equipment and machinery, and all other facilities and services necessary for the proper execution and completion of the Work. The Contractor shall pay sales, consumer, use, and other similar taxes that are required for proper completion of the Project.

7.5 The Contractor warrants that material and equipment will be of good quality and new unless otherwise approved by Owner, that the Work will be free from defect not inherent in the quality required, and that the Work will conform to the requirements of the Plans. Work not conforming to these requirements, including substitutions not properly approved and authorized may be considered defective. If required by the Owner, the Contractor shall furnish satisfactory evidence as to the kind and quality of materials and equipment.

7.6 The Contractor shall comply with and give notices required by law, ordinances, rules, regulations, and lawful orders of public authorities bearing on performance of the Work. The Owner shall promptly notify the Contractor if the Plans or any portion of the Work are observed by the Owner to be a variance therewith.

7.7 The Contractor shall keep the premises and surrounding area free from accumulation of waste materials or rubbish caused by operations in performance of the Work. At the completion of the Work, the Contractor shall remove from and about the Project all construction equipment, surplus materials, waste materials, and rubbish.

7.8 The Contractor shall take all reasonable precautions to ensure the safety of and prevent damage to property or materials to be incorporated into the Project and to other property and materials at the site or adjacent thereto.

7.9 The Contractor shall repair any damage caused by the action or negligence of his employees or those of any of his subcontractors.

8. RESPONSIBILITIES OF OWNER

8.1 The Owner shall arrange all funding needs for the Project so that sufficient funds exist to pay all bills within ten (10) days of the invoice date.

8.2 After submission, either in writing or verbally to Owner from Contractor of a list of items requiring selection by Owner, Owner shall promptly act to select the items and inform Contractor thereof, including the source thereof, on or before the date requested.

8.3 Owner shall inform Contractor promptly of any changes desired in the Plans, changes in Owner selections, or other matters affecting the schedule so that adjustments can be incorporated in the schedules.

9. CHANGE OF PLANS

The Owner may order changes in the Work consisting of additions, deletions, or modifications ("Change Order(s)"). Such Change Orders shall be authorized by written Change Order signed by the Owner and the Contractor. The Contractor may accept verbal change orders from the Owner and the Owner agrees to provide a signed confirmation communicated to Contractor.

10. INSURANCE

The Contractor shall provide insurance related to the Project, at the Owner's expense, including builder's risk and wind.

11. DISPUTE RESOLUTION

11.1 If a dispute arises between the parties regarding whether payments may be withheld under subparagraph 7.2, which the parties cannot resolve between themselves after a reasonable effort has been made, it is agreed that the matter will be submitted to a neutral mediator. The mediator will render a binding decision with respect to the particular payment(s) in dispute and shall make such directives as deemed necessary in the mediator's sole discretion to bring resolution of the dispute. The mediator's directives shall become part of the obligation imposed by this Contract. The cost of the mediator will be borne by the party against whom the decision is rendered.

11.2 Apart from any dispute with regard to payment, if a dispute arises between the parties as to whether the Contractor is acting so as to direct the progress and quality of the Work

performed in such a manner as to assure that the Work will be completed in accordance with the Plans and will meet reasonable standards of workmanship quality normally observed for project of similar type and circumstances, which the parties cannot resolve between themselves after a reasonable effort has been made, it is agreed that the matter will be submitted to a neutral mediator for a binding resolution. The mediator will render a decision with respect to the particular issues in dispute and shall make such directives as deemed necessary in the mediator's judgment taking into account the merits of each party's position with respect to the issues in dispute.

11.3 To the extent possible, the same mediator will be designated to resolve disputes within the scope of subparagraphs 11.1 and 11.2.

11.4 If a dispute arises as to whether a directive of a mediator's decision rendered pursuant to subparagraph 11.2 is being or has been met, the dispute shall be immediately referred to the mediator rendering the directive. The mediator shall render a further decision with respect to whether the directives of the previous decision have been met.

11.5 The Contractor and Owner will proceed, if possible, with the Project while the resolution of the dispute takes place.

11.6 Nothing contained in this Paragraph 11 shall constitute a waiver of:

(a) any claims or causes of action that accrue to Owner under any applicable consumer protection or Deceptive Trade Practices Acts,
(b) any warranty applicable to the Project and the Work, or
(c) any obligation or duty owed to Owner by Contractor and accruing by operation of law.

However, by this Paragraph, the parties agree that any claim or cause of action that one party has against the other, whether it be for breach of this Contract or for breach of any warranty or other obligation, shall be resolved by means of arbitration under the auspices and rules of the American Arbitration Association, which shall be commenced at any time by either party by filing a demand for arbitration upon the other party or parties and the American Arbitration Association. The arbitrator shall be a person who is qualified to make decisions regarding construction quality issues and shall be an attorney. The award of the arbitrator shall be final and binding on all parties. All parties to this Contract covenant and agree that the right of the Contractor to realize upon any property given as security for the payment of this Contract shall not be affected, enjoined or frustrated in any manner by the pendency of any arbitration proceeding commenced pursuant hereto, and any rights of Contractor to realize upon such security shall be expressly exempt from any arbitration proceeding brought pursuant to this paragraph. The statute of limitations,

estopped, waiver, laches and similar doctrines which would otherwise be applicable in an action brought by a party shall be applicable in any arbitration proceeding, and the commencement of an arbitration proceeding shall be deemed the commencement of an action for these purposes.

12. TERMINATION OF CONTRACT

12.1 The Owner may terminate the Contract upon providing a written notice of termination to Contractor. The notice of termination shall be effective on the date delivered to the Contractor. The notice shall be deemed delivered when either (a) hand delivered to Contractor's principal place of business in Rockport, Texas, or (b) deposited in the United States Mail, return receipt requested, addressed to Richard Dias Construction Co., 4570 Highway 35 North, Rockport, Texas 78382.

12.2 Contractor may terminate the Contract if Owner fails to make payment required under the Contract upon providing a written notice of default and intent to terminate. If payment is not made and the default is not cured within seven (7) days of delivery of the notice of intent to terminate, the Contractor may then deliver its notice of termination and the agreement shall be automatically terminated as of the date of delivery. The notices shall be deemed delivered when deposited in the United States Mail, first class, postage prepaid, certified or registered mail, return receipt requested, addressed to Richard Dias Construction Company, 4570 Highway 35 N, Rockport, TX 78382.

12.3 If the Contract is terminated pursuant to either of subparagraphs 12.1 or 12.2, Contractor shall be entitled to recover from Owner payment for the Cost of all Work executed and for proven loss with respect to the cost of material, equipment, tools, machinery, subcontractor cancellation charges and penalties, plus the Contractor's fee. If Contractor and Owner are unable to agree as to the amount of such payment, the matter shall be resolved pursuant to the arbitration provision of Paragraph 11.

12.4 If the Contract is terminated with cause under Paragraph 12, the Contractor shall no longer direct any Work on the Project and the Owner may finish the Work by whatever method the Owner may deem expedient.

13. **SIGNATURES OF THE PARTIES**

OWNER(S): Estes Point Development LLC

NAME:

SIGNATURE DATE

CONTRACTOR: R DIAS CONSTRUCTION, LLC.

Darrin Shandley, Vice President

Darrin Shandley
Darrin Shandley (Mar 28, 2025 07:52 CDT)

03/28/2025

SIGNATURE DATE

Attachements:
A) Budget
B) Plans &
Specs

Exhibit A: Cost of Work

Marea Monument Sign							
	COST PLUS TEMPLATE						
3/31/25			**Draw 1**	**Draw 2**	**Draw 3**		
			INPUT DATE	**INPUT DATE**	**INPUT DATE**		
	Item Breakdown	**Est. Cost**	**Act. Cost**	**Act. Cost**	**Act. Cost**	**Adj.**	**($) Dif.**
Surveys & Legal	Location by Owner	$ -	$ -	$ -	$ -		$ -
Dump Fees	Gold Box	$ 451.80	$ -	$ -	$ -		$ 451.80
Project Manager	RDCC	$ 720.00	$ -	$ -	$ -		$ 720.00
Other	Gen. Liability Ins.	$ 223.00	$ -	$ -	$ -		$ 223.00
	Subtotal	**$ 1,394.80**	**$ -**	**$ -**	**$ -**		**$ 1,394.80**
Site Prep & Foundation							
Foundation		$ 4,800.00	$ -	$ -	$ -		$ 4,800.00
	Subtotal	**$ 4,800.00**	**$ -**	**$ -**	**$ -**		**$ 4,800.00**
Framing - Erection - Trusses							
Does not apply		$ -	$ -	$ -	$ -		$ -
	Subtotal	**$ -**	**$ -**	**$ -**	**$ -**		**$ -**
Exterior Door/Window							
Does not apply		$ -	$ -	$ -	$ -		$ -
	Subtotal	**$ -**	**$ -**	**$ -**	**$ -**		**$ -**
Interior Subcontractors							
Electrical	Reel Electric	$ 1,800.00	$ -	$ -	$ -		$ 1,800.00
	Subtotal	**$ 1,800.00**	**$ -**	**$ -**	**$ -**		**$ 1,800.00**
Insulation, Drywall (TFT)							
Does not apply		$ -	$ -	$ -	$ -		$ -
	Subtotal	**$ -**	**$ -**	**$ -**	**$ -**		**$ -**
Roofing							
Does not apply		$ -	$ -	$ -	$ -		$ -
	Subtotal	**$ -**	**$ -**	**$ -**	**$ -**		**$ -**
Exterior Finish							
Siding/exterior package	CMU/Stucco	$ 7,280.00	$ -	$ -	$ -		$ 7,280.00
Signs w/ Lighting	BY OWNER	$ -	$ -	$ -	$ -		$ -
	Subtotal	**$ 7,280.00**	**$ -**	**$ -**	**$ -**		**$ 7,280.00**
Exterior Items							
Demo Old Signs		$ 5,000.00	$ -	$ -	$ -		$ 5,000.00
	Subtotal	**$ 5,000.00**	**$ -**	**$ -**	**$ -**		**$ 5,000.00**
Interior Finishes							
Other	Misc & Contingency	$ 2,200.00	$ -	$ -	$ -		$ 2,200.00
	Subtotal	**$ 2,200.00**	**$ -**	**$ -**	**$ -**		**$ 2,200.00**
Flooring & Final Items							
Landscaping	Lighting	$ -	$ -	$ -	$ -		$ -
Irrigation	By Owner	$ -	$ -	$ -	$ -		$ -
Other		$ -	$ -	$ -	$ -		$ -
	Subtotal	**$ -**	**$ -**	**$ -**	**$ -**		**$ -**
COST SUBTOTAL		$ 22,474.80	$ -	$ -	$ -		$ 22,474.80
Overhead/Profit Rate*	**10.00%**	**10.00%**					
	Overhead/Profit	$ 4,719.71	$ -	$ -	$ -		$ 4,719.71
Total Price to Customer		$ 27,194.51	$ -	$ -	$ -		$ 27,194.51
* Note: Put Overhead Rate (stated in tenths - e.g. .10 for 10%) in Column B and Profit Percentage (in tenths) in Column							

3 L2.3 "HALO" BACK LIGHT EFFECT
UNSCALED IMAGE

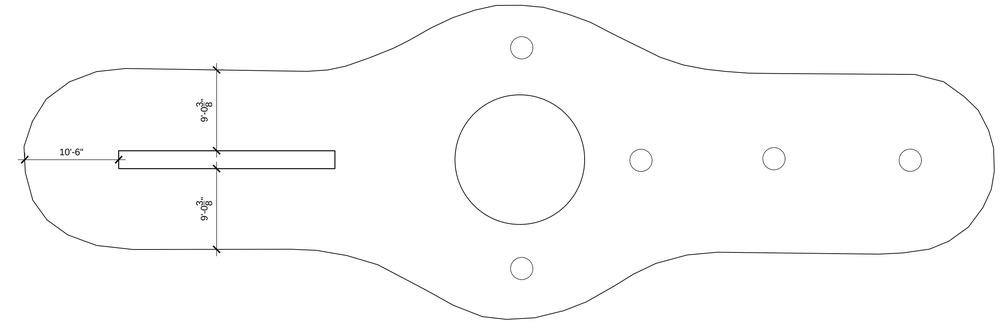

2 L2.3 EXISTING LBV ENTRY WALL MONUMENT
1/8"=1'-0" PLAN

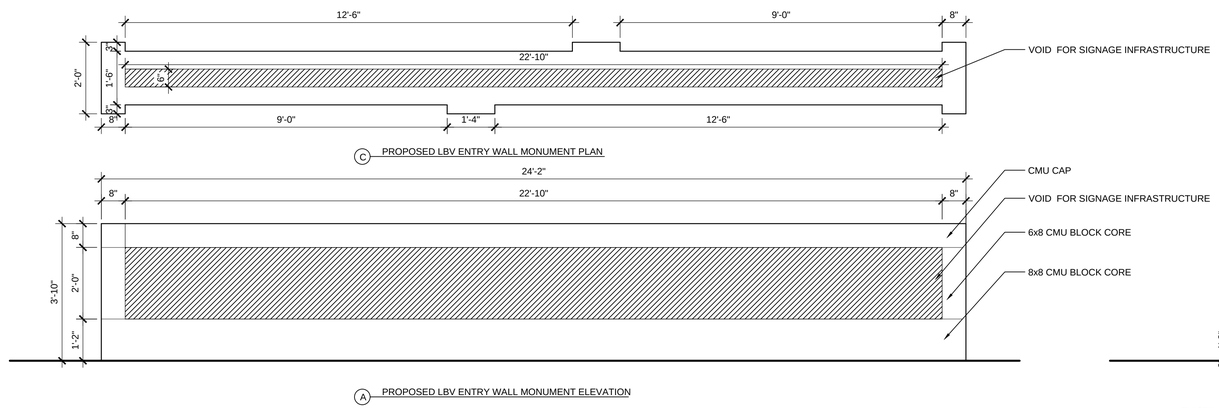

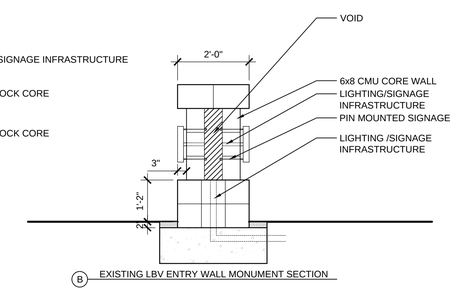

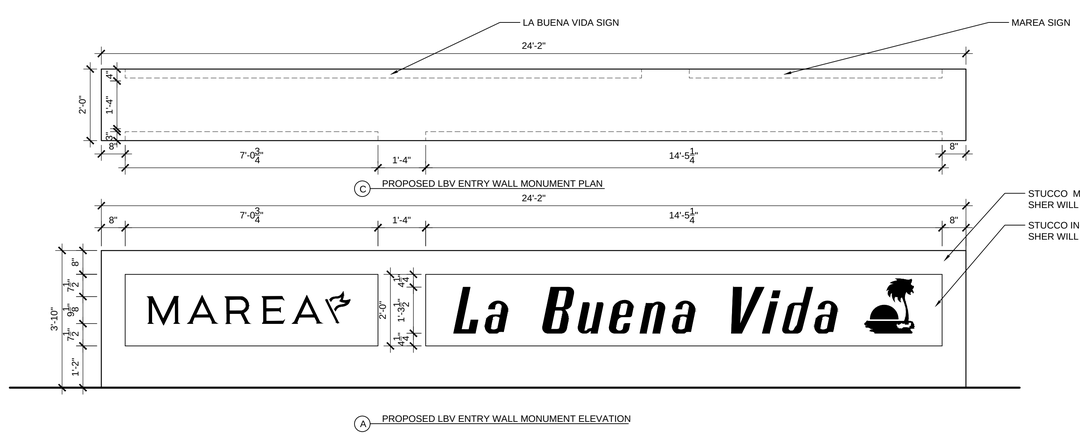

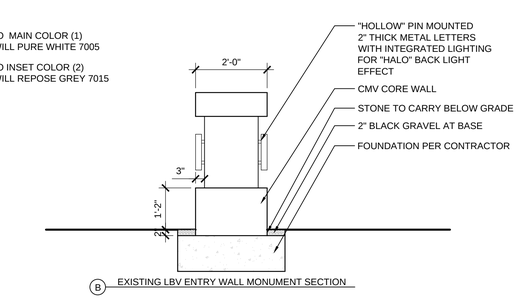

1 L2.3 EXISTING LBV ENTRY WALL MONUMENT
1/2"=1'-0" ELEVATION

dtj DESIGN
ARCHITECTURE
PLANNING
LANDSCAPE ARCHITECTURE

DTJ DESIGN, Inc.
3101 Iris Avenue, Suite 130
Boulder, Colorado 80301
T 303.443.7533

www.dtjdesign.com

MAREA AT ESTES POINTE
CONSTRUCTION DOCUMENTATION

PORT ARANSAS, TX

NOT FOR CONSTRUCTION

DRAWN BY:	GO
CHECKED BY:	JC
PROJECT NO.:	2023056.10
ISSUE DATE:	09/18/2024
REVISIONS:	
	03/24/2025

SHEET TITLE:

SITE DETAILS

SHEET NUMBER:

L2.3

Drawing: U:\2023056.10 Estes Pointe\05 CAD\Sheets\02_CD\L2.1-L2.XX SITE DETAILS-ESTES POINTE.dwg
Last Saved: January 13, 2025 10:54:42 AM by Gonderdonk
Last Plotted 3/24/2025 3:31:14 PM
COPYRIGHT © ALL RIGHTS RESERVED DTJ DESIGN, INC. 2019